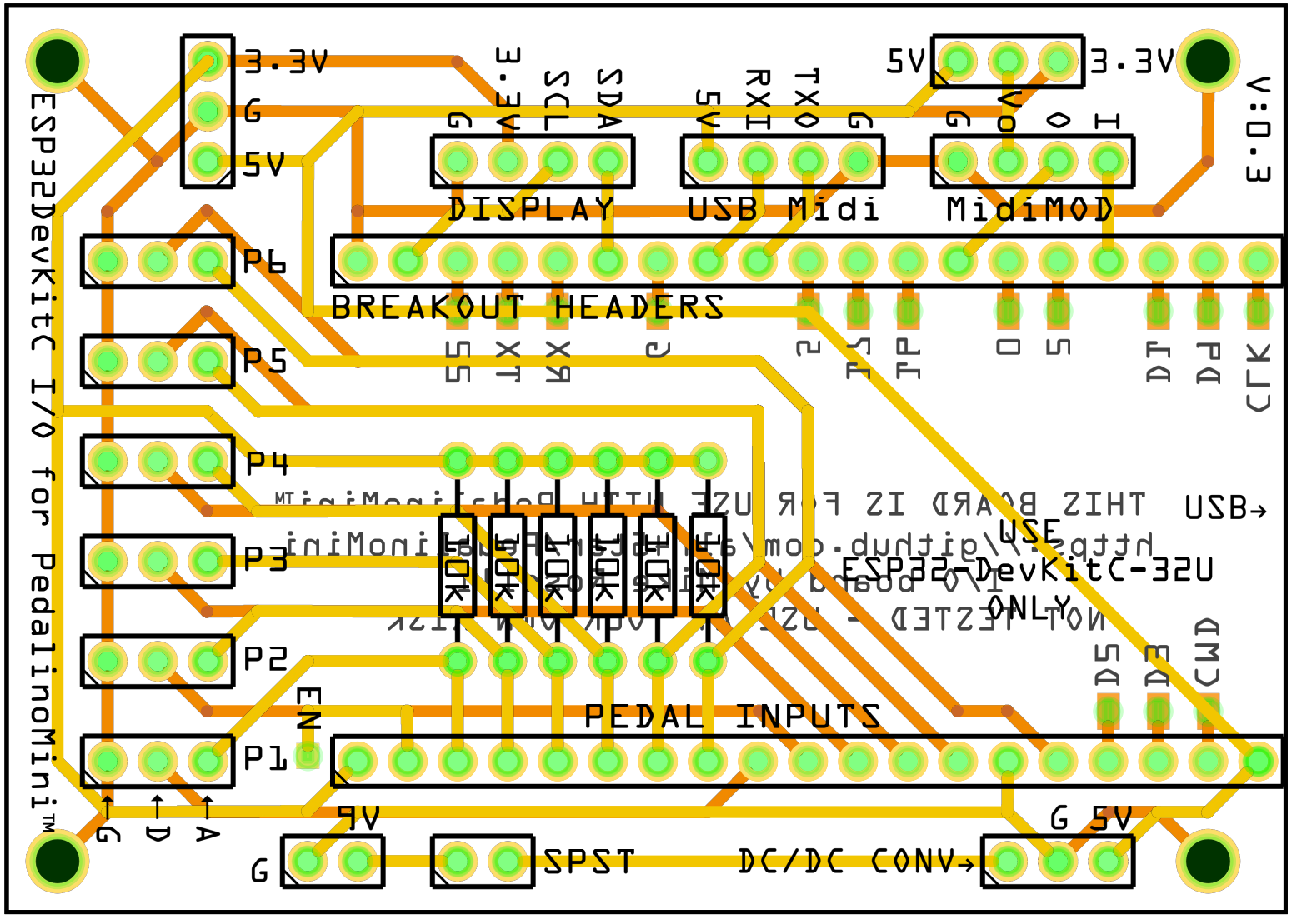
ESP32DevKitC I/O for PedalinoMini™
3.3V
G
5V
3.3V
SCL
SDA
G
DISPLAY
5V
RXI
TXO
G
USB Midi
5V
3.3V
G
Vo
O
I
MidiMOD
V:0.3
P6
BREAKOUT HEADERS
P5
P4
P3
P2
P1
EN
USB→
USE
ESP32-DevKitC-32U
ONLY
PEDAL INPUTS
G
D
A
9V
G
SPST
DC/DC CONV→
G 5V

fritzing