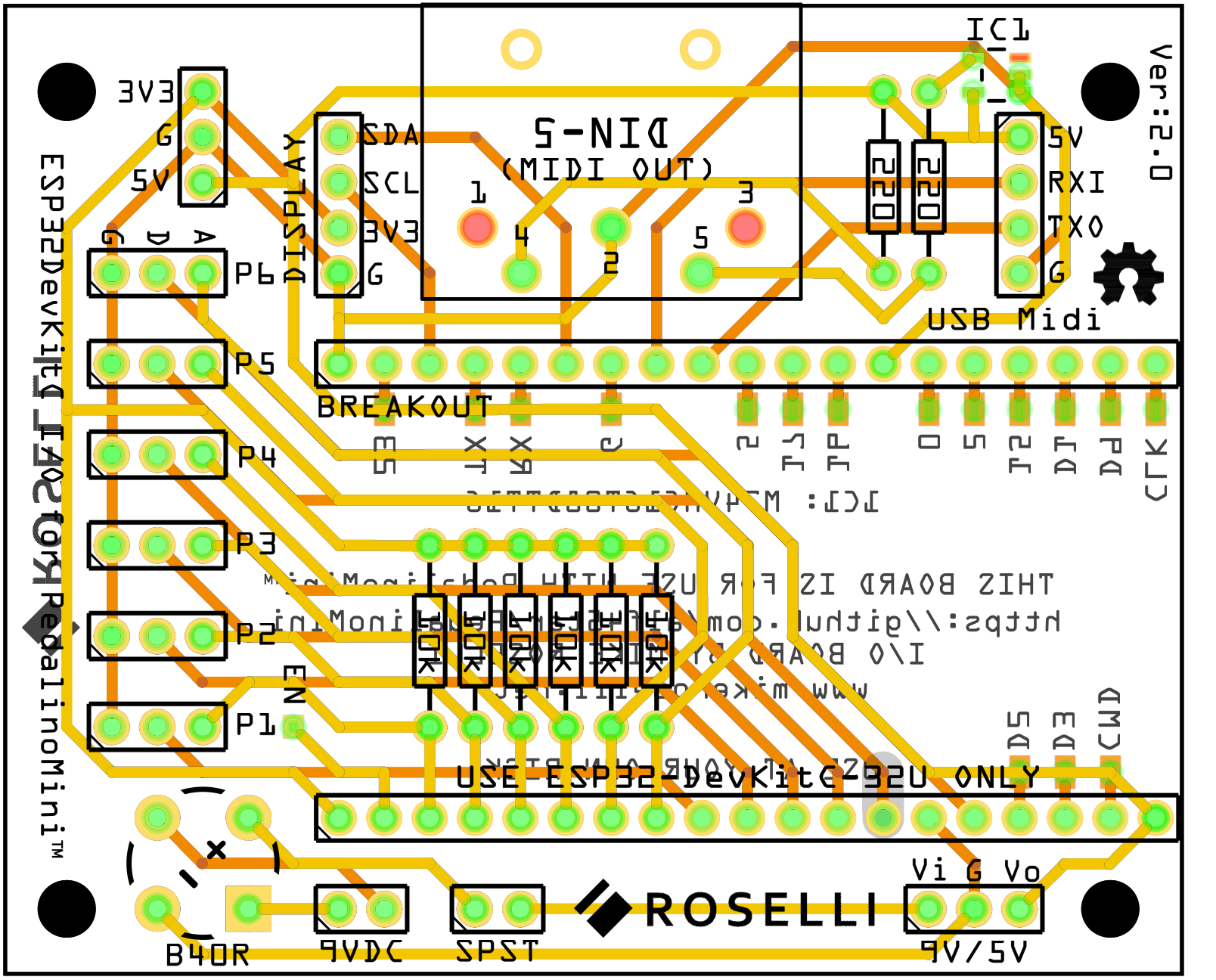

3V3
G
5V
DISPLAY
SDA
SCL
3V3
G
DIN-5
(MIDI OUT)
1
4
2
5
3
IC1
220
220
5V
RXI
TXO
G
USB Midi
Ver:2.0
G D A
P6
P5
P4
P3
P2
P1
EN
BREAKOUT
10K
10K
10K
10K
10K
10K
USE ESP32-DevKitC-32U ONLY
ESP32DevKitC I40 for PedalinoMini™
B40R
9VDC
SPST
ROSELLI
Vi G Vo
9V/5V

fritzing